Unit Information

Limited 2 Year Warranty
60Hz
3.0 Amps
2 Speed Motor
Drive Coupling Easily Replaced on Site

WARING COMMERCIAL

BB150 - BB150S
plastic container - stainless steel container

BB150PT - BB150ST /Taiwan
plastic container - stainless steel container

BB15DP - BB15DS /Don
plastic container - stainless steel container

BB15DW /Don white base

BB15RP - BB15RS /Rykoff *(Discontinued)*

BB15PC - BB15SC /Sysco
extra plastic container - extra stainless steel container

BB160 - BB160S /chrome base
plastic container - stainless steel container

BC150P - BC150S /Canadian
plastic container - stainless steel container

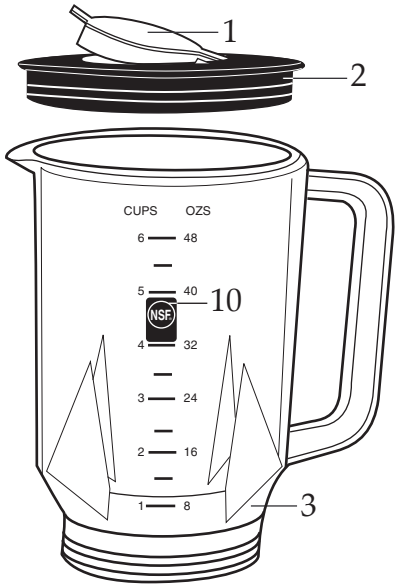

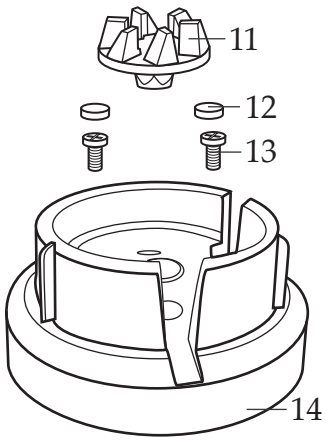

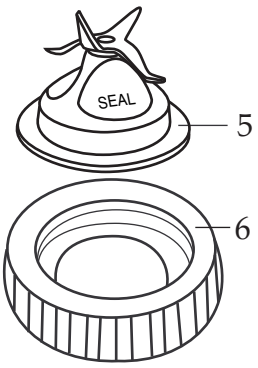

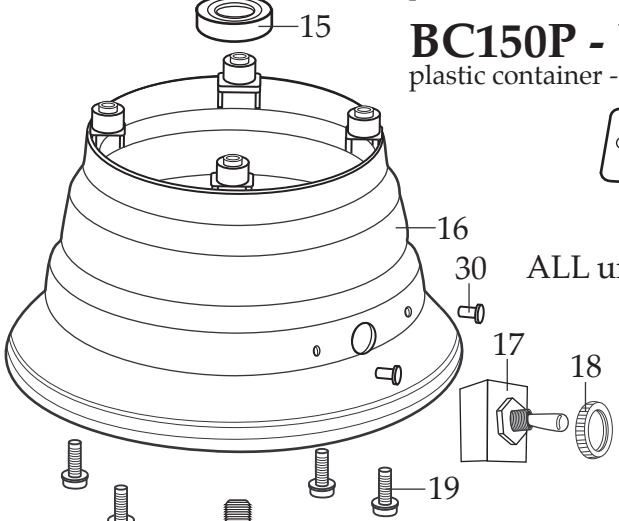

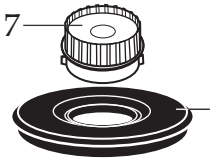

500665
2 Piece Lid

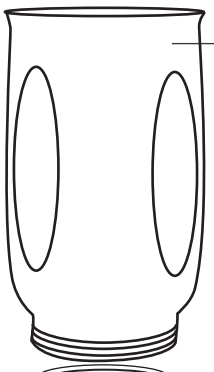

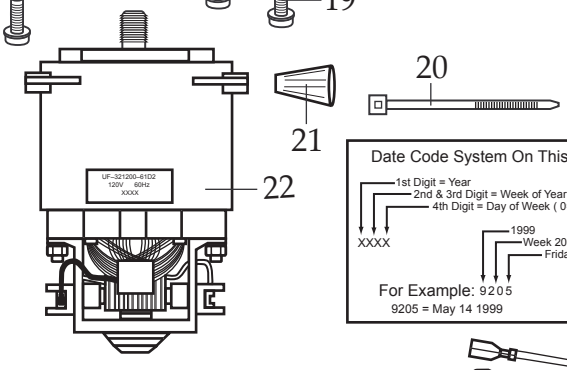

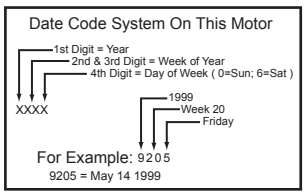

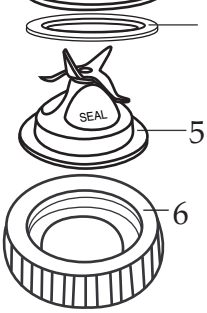

501460
Stainless Steel Container
with Jar Bottom Assy.

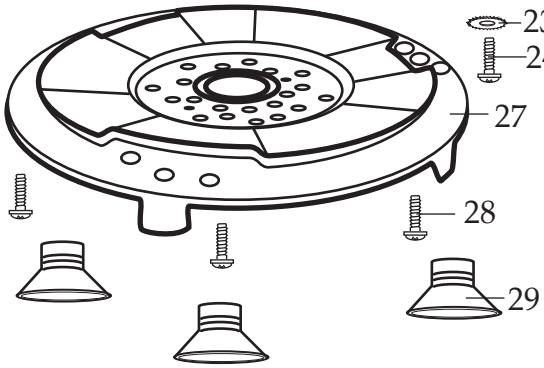

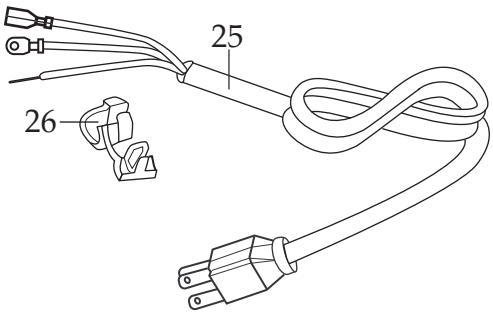

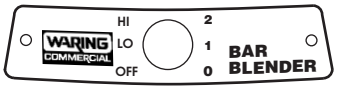

014899
Name Plate
ALL units EXCEPT Don & Sysco

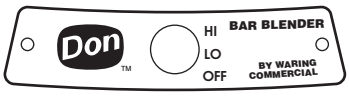

018139
Name Plate
BB15DP, BB15DS, BB15DW

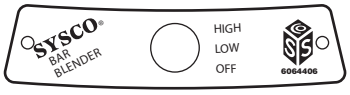

023257
Name Plate
BB15PC, BB15SC

PDF compression, OCR, web optimization using a watermarked evaluation copy of CVISION PDFCompressor

Catalog	Older Model	Current Model
BB150	36BL93	51BL13
BB150S	36BL70	51BL10
BB150PT - BB150ST		BB150*T
BB15DP	37BL30	51BL14
BB15DS	37BL31	51BL11
BB15DW	39BL21	51BL15
BB15RP - BB15RS	47BL10	
BB15PC - BB15SC	38BL36	51BL12
BB160	39BL67	51BL35
BB160S		BB160S
BC150P - BC150S	36BL82	BC150*

Waring Factory Service Center
314 Ella T. Grasso Ave.
Torrington, CT 06790
Tele. 1-800-269-6640
Fax 860-496-9017
www.waringproducts.com

WARING COMMERCIAL®

Illustration#	Part#	Description
1	018534	Lid Insert
2	024367	Outer Lid /black
	018532	Outer Lid /white
3	018531	Jar /plastic 48 oz.
4	006890	Gasket
5	502508	Blending Assy.
6	015388	Jar Bottom /black
	019614	Jar Bottom /white
7	011700	Center Lid
8	013443	Outer Lid
9	024661	Jar /stainless steel 32 oz.
10	013304	NSF Seal
11	014009	Coupling
12	016094	Hole Plug 2 Req.'d
13	013768	Screw 2 Req.'d
14	017381	Jar Adapter /black
	019605	Jar Adapter /white
15	018605	Housing Seal
16	017463	Base /black ALL units EXCEPT BB150DW, BB160, BB160S
	019602	Base /white BB150DW
	016313	Base /chrome BB160, BB160S
17	012698	Switch
18	015098	Nut Ring
19	024595	Screw & Washer *(current production)*
20	013731	Cable Tie 2 Req.'d
21	009051	Wire Nut 1 Req.'d *(current production)*, 2 Req.'d *(older units)* 5 Req.'d /BB150PT and BB150ST
	012409	Crimp Connector 2 Req.'d /ALL BC150P and BC150S
22	024488	Motor *(current production)*
	703699	Motor *(older units)*

PDF compression, OCR, web optimization using a watermarked evaluation copy of CVISION PDFCompressor

Catalog	Older Model	Current Model
BB150	36BL93	51BL13
BB150S	36BL70	51BL10
BB150PT - BB150ST		BB150*T
BB15DP	37BL30	51BL14
BB15DS	37BL31	51BL11
BB15DW	39BL21	51BL15
BB15RP - BB15RS	47BL10	
BB15PC - BB15SC	38BL36	51BL12
BB160	39BL67	51BL35
BB160S		BB160S
BC150P - BC150S	36BL82	BC150*

Waring Factory Service Center
314 Ella T. Grasso Ave.
Torrington, CT 06790
Tele. 1-800-269-6640
Fax 860-496-9017
www.waringproducts.com

Illustration#	Part#	Description
23	002943	Lock Washer
24	013659	Sem
	015383	Washer *(older units)* 4 Req.'d
	001832	Screw *(older units)* 4 Req.'d
25	501162	Cord Set sALL units EXCEPT ones listed below
	500830	Cord Set BB150PT, BB150ST, BC150P, BC150S
26	016041	Strain Relief
27	024055	Bottom Plate ONLY /ALL units EXCEPT BC150P, BC150S
	502692	Bottom Plate Assy. *(current production)* BC150P, BC150S
	501733	Bottom Plate Assy. *(older units)* BC150P, BC150S
28	013659	Sem 3 Req.'d
29	017384	Suction Cup Foot 3 Req.'d
	002891	Foot 3 Req.'d BC150P, BC150S
	003569	Screw 3 Req.'d BC150P, BC150S
30	003532	Rivet 2 Req.'d
31	014553	Cable Clamp BC150P, BC150S
32	007558	Screw BC150P, BC150S
33	012369	Kep Nut BC150P, BC150S

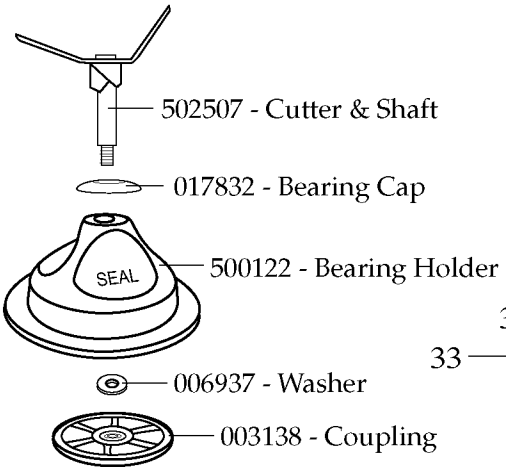

Parts for the 502508 Blending Assy.
(that can be purchased separately)

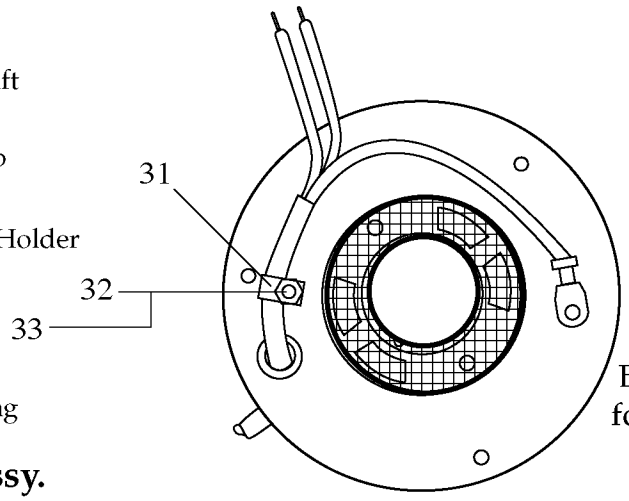

502962
Bottom Plate Assy.
for BC150P, BC150S

PDF compression, OCR, web optimization using a watermarked evaluation copy of CVISION PDFCompressor

Catalog	Older Model	Current Model
BB150	36BL93	51BL13
BB150S	36BL70	51BL10
BB150PT - BB150ST		BB150*T
BB15DP	37BL30	51BL14
BB15DS	37BL31	51BL11
BB15DW	39BL21	51BL15
BB15RP- BB15RS	47BL10	
BB15PC- BB15SC	38BL36	51BL12
BB160	39BL67	51BL35
BB160S		BB160S
BC150P - BC150S	36BL82	BC150*

Waring Factory Service Center
314 Ella T. Grasso Ave.
Torrington, CT 06790
Tele. 1-800-269-6640
Fax 860-496-9017
www.waringproducts.com

Items Not Shown

003532 - Rivet /name plate 2 Req.'d

501400 - Lead /*(older units)* use 2 wire nuts

502512 - Lead & Diode /(003262) *(older units)* that use 2 wire nuts

502693 - Fuse Assy. /*(current production)* BC150P, BC150S

500916 - Lead & Diode (003262) /*(older units)* BC150P, BC150S

002943 - Washer 2 Req.'d /screen *(older units)* BC150P, BC150S

002881 - Kep Nut 2 Req.'d /ground lead*(older units)* BC150P, BC150S

501512 - Lead /*(older units)* BC150P, BC150S

014312 - Screen /*(older units)* BC150P, BC150S

025619 - EMI Filter BB150PT, BB150ST

501139 - Lead BB150PT, BB150ST

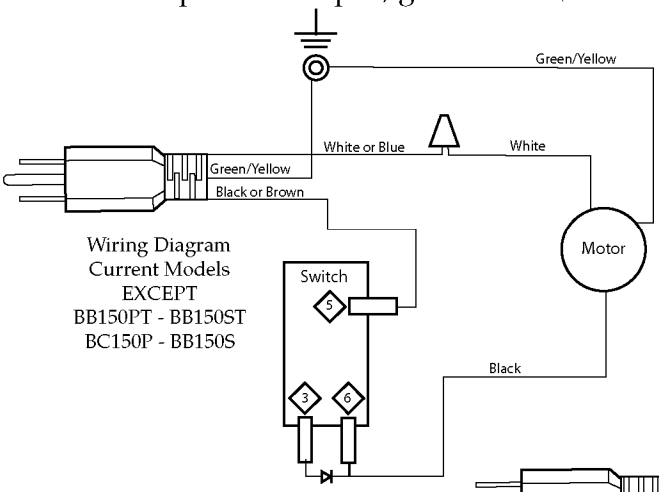

Wiring Diagram
Current Models
EXCEPT
BB150PT - BB150ST
BC150P - BB150S

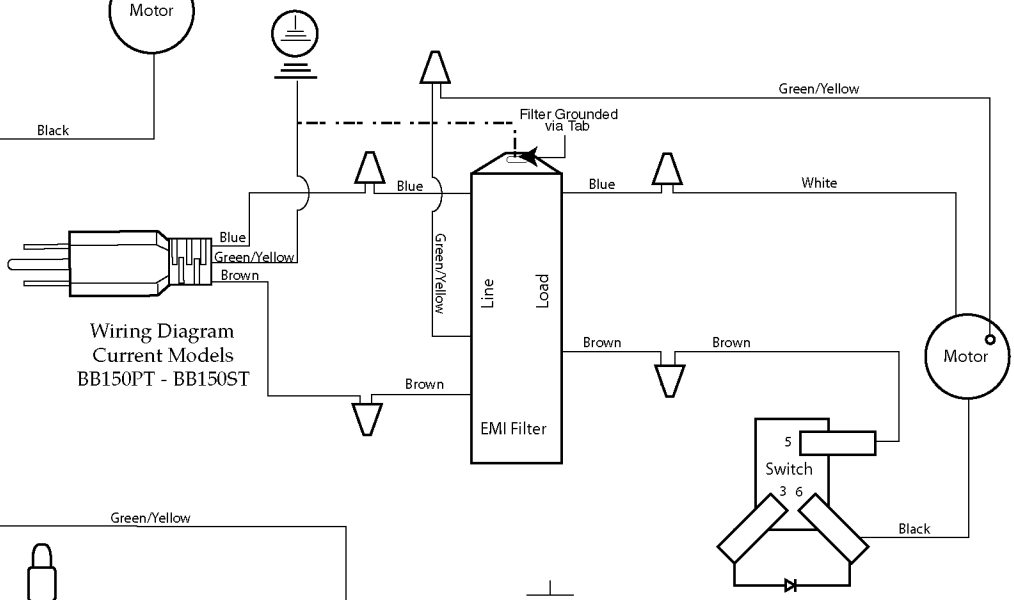

Wiring Diagram
Current Models
BB150PT - BB150ST

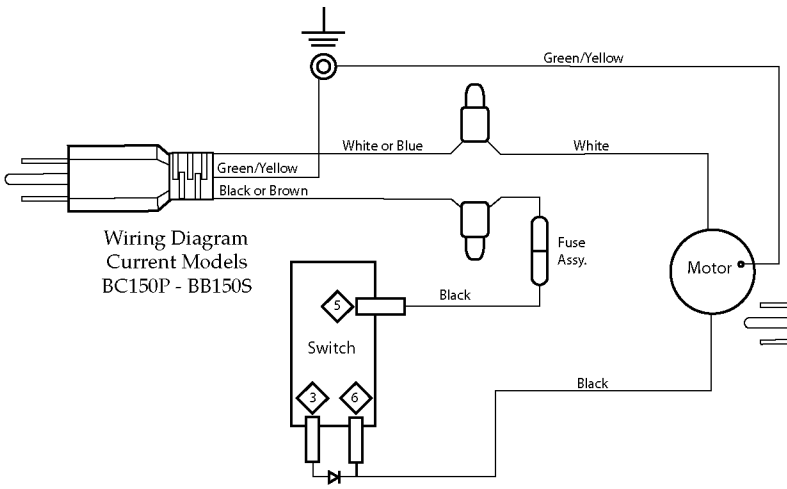

Wiring Diagram
Current Models
BC150P - BB150S

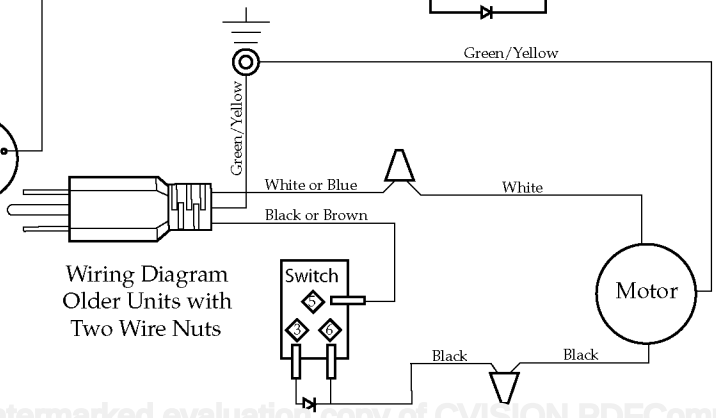

Wiring Diagram
Older Units with
Two Wire Nuts

PDF compression, OCR, web optimization using a watermarked evaluation copy of CVISION PDFCompressor