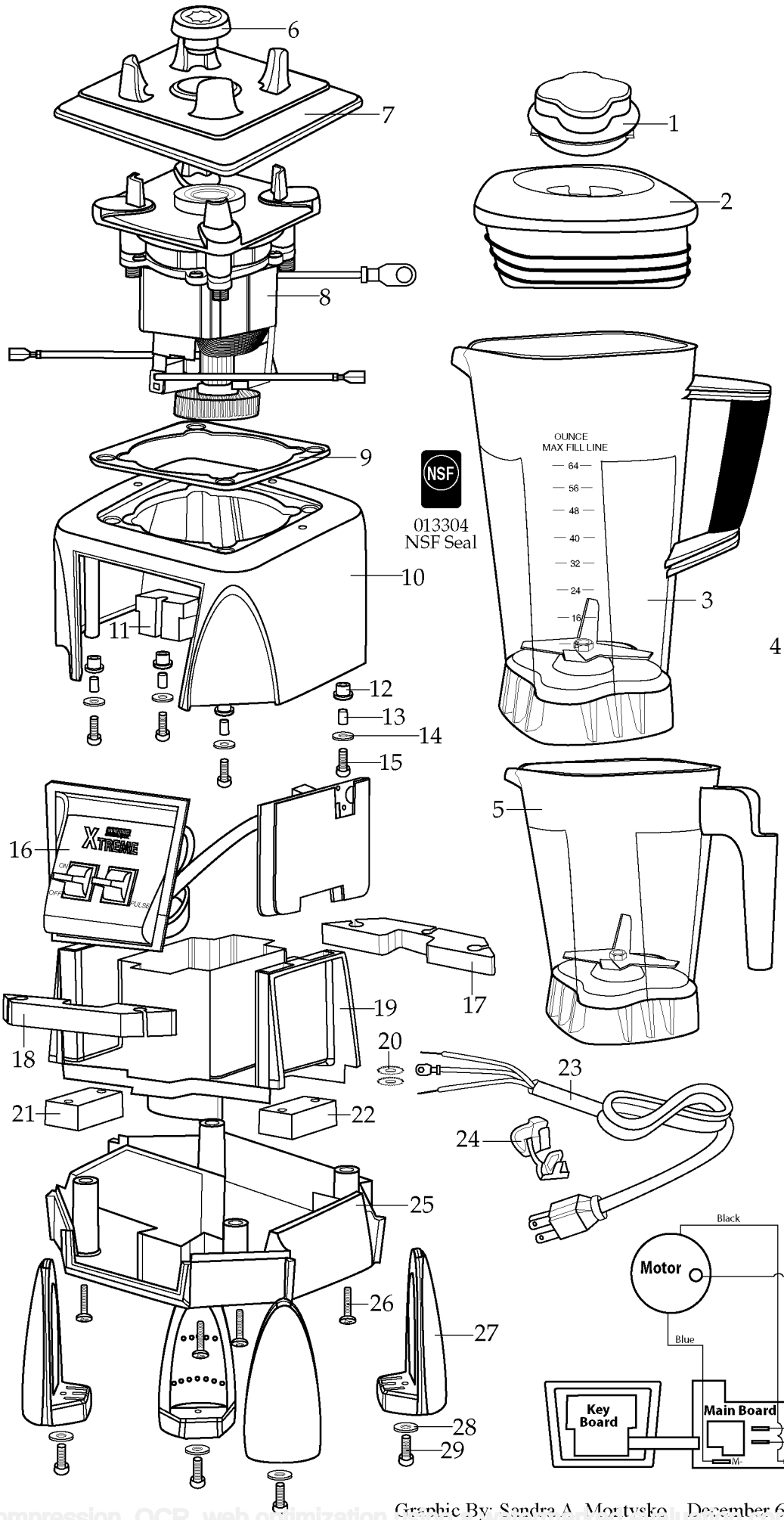

WARING COMMERCIAL

MX1000XT
64 oz. polycarbonate container

MX1000XTP
32-48 oz. polycarbonate container

MX1000XTS
64 oz. stainless steel container

NDG1000XT
NextDayGourmet-private label
64 oz. polycarbonate container

Unit Information

Limited 3 Year Motor Warranty
Two Year Parts & Labor

60Hz – 13 Amps

Height 19″ – Weight 15 lbs.

3 HP Motor

30,000+ RPM's

One Piece Dishwasher Safe
Removable Jar Pad

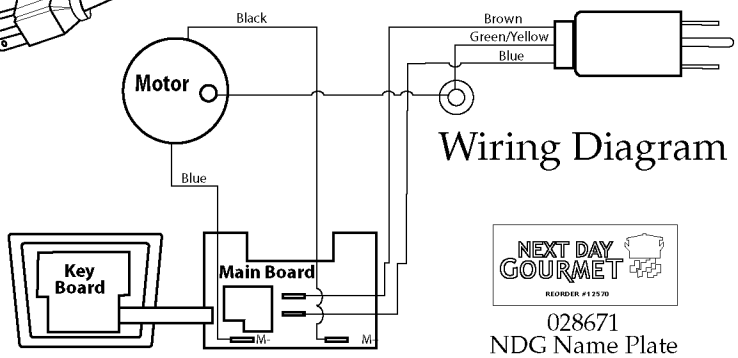

Wiring Diagram

NEXT DAY GOURMET
REORDER #12570

028671
NDG Name Plate

Graphic By: Sandra A. Mortysko December 6, 2006 Approved 12/7/06 Page 1 of 2

PDF compression, OCR, web optimization using a watermarked evaluation copy of CVISION PDFCompressor

Catalog	Model
MX1000XT	MX1000XT11
MX1000XTP	MX1000XT21
MX1000XTS	MX1000XT31
NDG1000XT	MX1000XT11

Waring Factory Service Center
314 Ella T. Grasso Ave.
Torrington, CT 06790
Tele. 1-800-269-6640
Fax 860-496-9017
www.waringproducts.com

Illustration #	Part #	Description
1	026425	Jar Lid Cover
2	026424	Jar Lid
3	503005	Jar with Blending Assy. /64 oz. polycarbonate
4	503009	Jar with Blending Assy. /64 oz. stainless steel
5	503010	Jar with Blending Assy. /32-48 oz. polycarbonate
6	028538	Drive Clutch
7	026442	Jar Pad
8	028100	Motor
9	026437	Dampening Plate Gasket
10	028032-09	Top Housing /black
11	028541	Motor Foam 2 Req.'d
12	026439	Dampening Plate Bushing 4 Req.'d
13	026453	Dampening Plate Sleeve 4 Req.'d
14	026459	Washer 4 Req.'d
15	026455	Screw 4 Req.'d
16	028388	Control Panel
	028570	Control Panel /NextDayGourmet
17	028248	Housing Foam Baffle /rear
18	028249	Housing Foam Baffle /front
19	028240	Motor Housing
20	002943	Washer 2 Req.'d
21	028247	Bottom Housing Foam Baffle
22	028542	Foam Baffle
23	026925	Cord Set
24	007556	Strain Relief
25	028241-09-x	Bottom Housing /black
26	012505	Screw 4 Req.'d
27	026430	Corner Post 4 Req.'d
28	026459	Washer 4 Req.'d
29	012505	Screw 4 Req.'d

PDF compression, OCR, web optimization using a watermarked evaluation copy of CVISION PDFCompressor